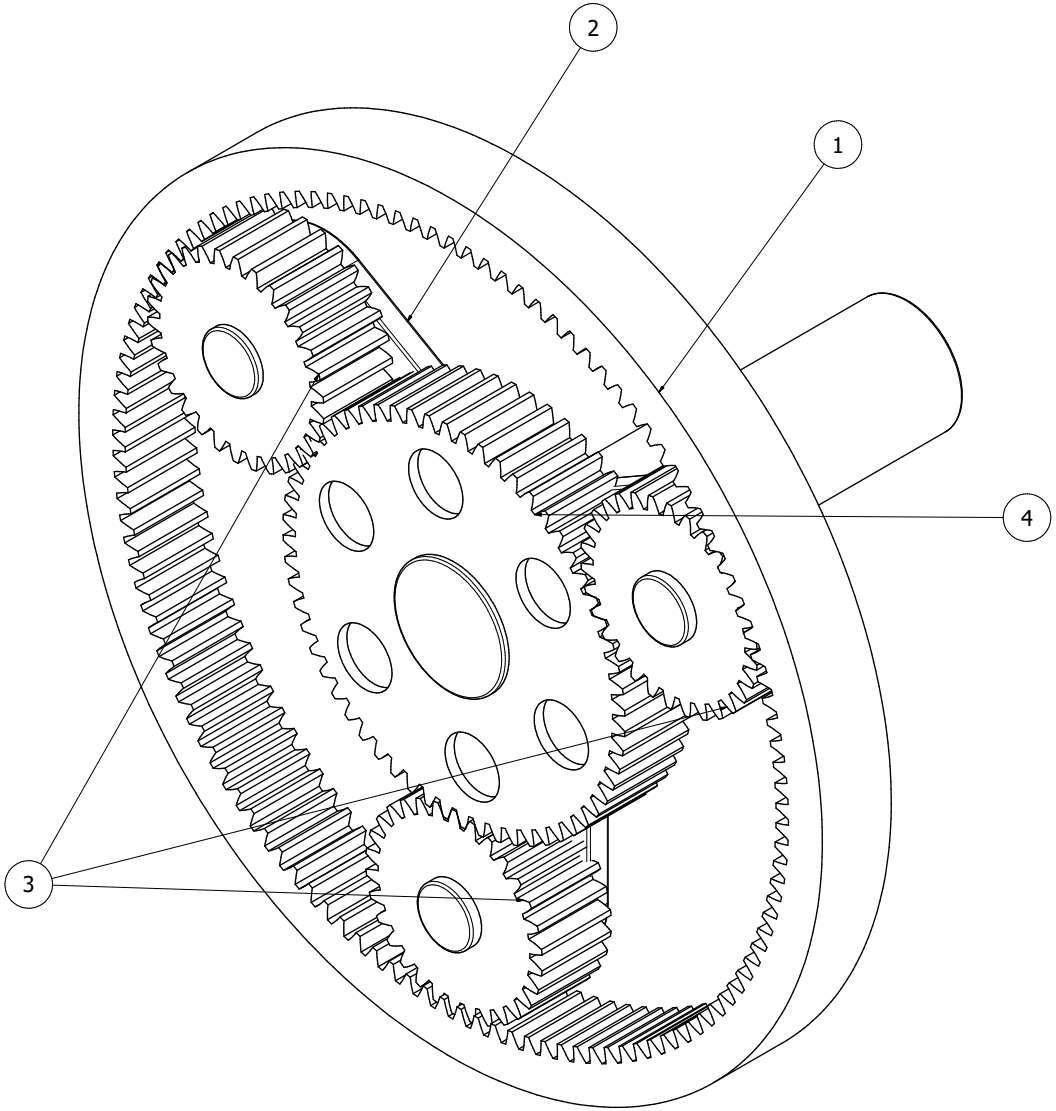

PARTS LIST

ITEM	QTY	PART NUMBER	MATERIAL
1	1	Ring gear	Stainless Steel, Austenitic
2	1	Planet carrier	Stainless Steel, Austenitic
3	3	Planet gear	Stainless Steel, Austenitic
4	1	Sun gear	Stainless Steel, Austenitic

DRAWN Kacper Szczykno	4/20/2026	
CHECKED		TITLE
QA		Planetary gear
MFG		
APPROVED		SIZE D / DWG NO Planetary_Gear / REV
		SCALE 1/2 / SHEET 1 OF 2

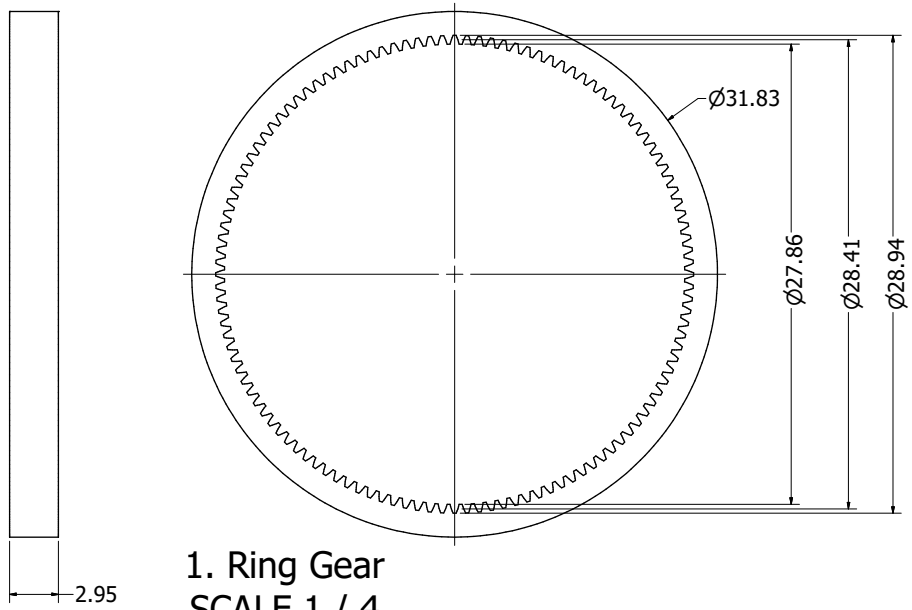

1. Ring Gear
SCALE 1 / 4

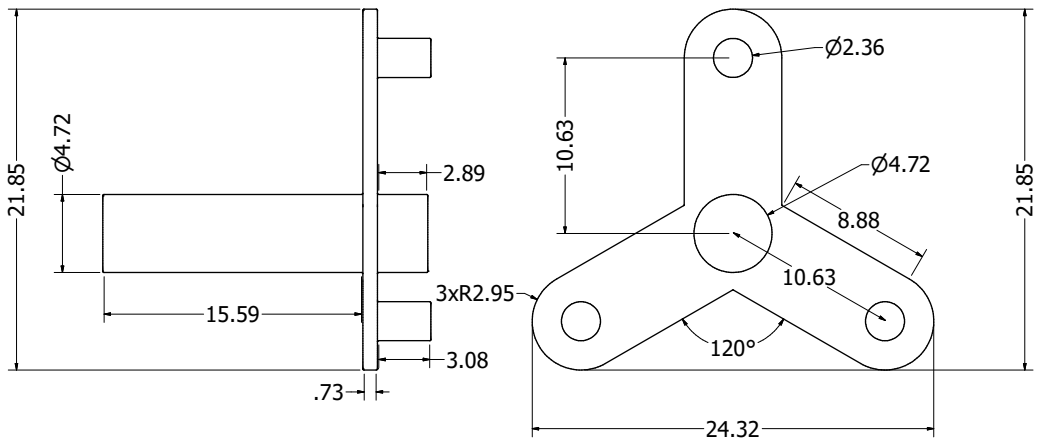

2. Planet Carrier
SCALE 1 / 4

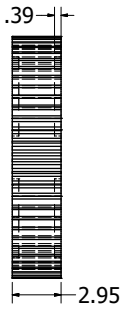

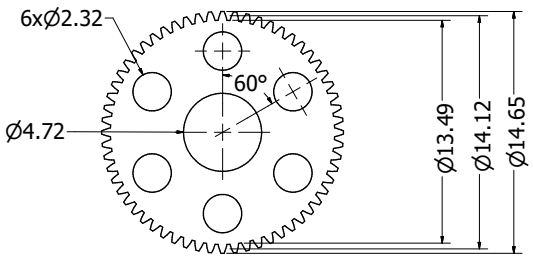

4. Sun Gear
SCALE 1 / 4

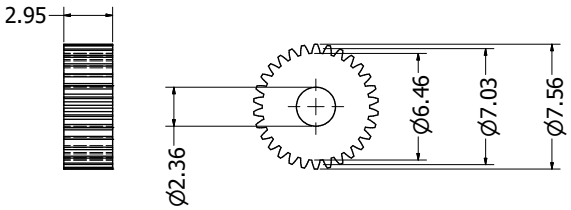

3. Planet Gear
SCALE 1 / 4

PARTS LIST			
ITEM	QTY	PART NUMBER	MATERIAL
1	1	Ring gear	Stainless Steel, Austenitic
2	1	Planet carrier	Stainless Steel, Austenitic
3	3	Planet gear	Stainless Steel, Austenitic
4	1	Sun gear	Stainless Steel, Austenitic

NOTE:
1. ALL DIMENSIONS IN MM.
2. FOLLOW TABLE FOR GEAR
3. BEARINGS NOT INCLUDED

DRAWN Kacper Szczykno	4/20/2026	
CHECKED		TITLE
QA		Planetary gear
MFG		
APPROVED		SIZE D / DWG NO Planetary_Gear / REV
		SCALE 1 / 4 / SHEET 2 OF 2